CA35D Rhino

Single drum vibratory roller

TECHNICAL DATA

MASSES

Operating mass (incl. ROPS)	12200 kg
Operating mass (incl. Cab)	12300 kg
Operating mass (incl. Canopy)	12100 kg
Module mass (front/rear)	7350/4950 kg (Cab)
Max. operating mass	12400 kg

COMPACTION

Static linear load	35 kg/cm
Nominal amplitude (high/low)	1.7/0.8 mm
Vibration frequency (high/low amplitude)	33/33 Hz
Centrifugal force (high/low amplitude)	250/123 kN

TRACTION

Speed range	5 /7 km/h (Dual speed) 5 /7 /7 /11 km/h (TC)
Tyre size (8 ply)	23.1 x 26 TL
Vertical oscillation	±9º
Theoretical gradeability PD-shell: Dual speed/ Traction Control	- /49%
Theoretical gradeability: Dual speed/Traction Control	42% /46%

HYDRAULIC SYSTEM

Driving	Hydrostatic
Vibration	Hydrostatic
Steering	Hydrostatic
Service brake	Hydrostatic in forward and reverse lever.
Parking/ Emergency brake	Failsafe multidisc brake in rear axle and front drum motor.

ENGINE

Manufacturer /Model	Cummins F3.8 (Stage V)
Type	Water cooled turbo diesel
Rated power, SAE J1995	100 kW (134 hp) @ 2200 rpm
Fuel tank capacity	280 l
DEF tank capacity	27 l

ENGINE

Manufacturer /Model	Cummins QSF3.8 (IIIA/T3)
Type	Water cooled turbo diesel
Rated power, SAE J1995	97 kW (130 hp) @ 2500 rpm
Fuel tank capacity	280 l

ENGINE

Manufacturer /Model	Cummins 4BT3.9-102C (I/T1)
Type	Water cooled diesel
Rated power, SAE J1995	76 kW (102 hp) @ 2300 rpm
Fuel tank capacity	280 l

Find us locally at www.dynapac.com

We reserve the right to change specifications without notice. Photos and illustrations do not always show standard versions of machines.
The above information is a general description only, all information's are supplied without liability.

CA35D Rhino

Single drum vibratory roller

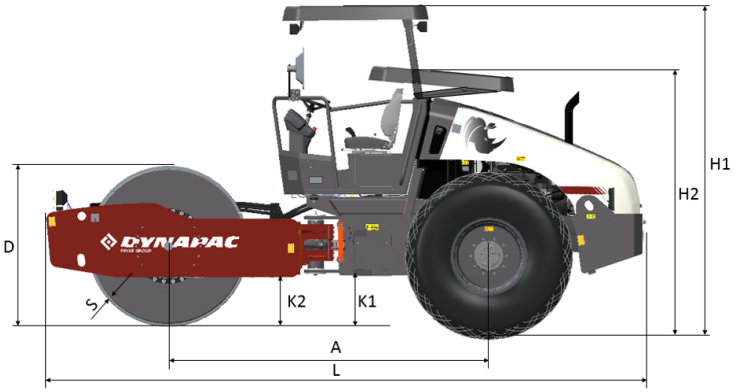

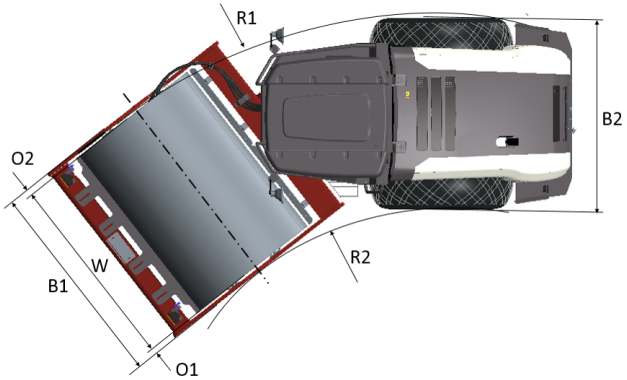

DIMENSIONS

DIMENSIONS

A. Wheelbase	2990 mm
B1. Width, front	2276 mm
B2. Width, rear	2130 mm
D. Drum diameter	1510 mm
H1. Height, with ROPS/cab	2890 mm
H2. Height, w/o ROPS/cab	2400 mm
K1. Ground clearance	460 mm
K2. Curb clearance	460 mm
L. Length	5560 mm
O1. Overhang, right	73 mm
O2. Overhang, left	73 mm
R1. Turning radius, outside	5660 mm
R2. Turning radius, inside	3245 mm
S. Drum shell thickness	30 mm
W. Drum width	2130 mm
α. Steering angle	±38°

STANDARD EQUIPMENT

- 12 V outlet (IIIA/T3 only)
- Amplitude, dual
- AVC, Automatic Vibration Control
- Back-up alarm
- Battery switch
- Brake release
- Emergency stop
- Filler caps lockable
- Fuel level gauge
- Fuel tank drainage
- Hood, lockable
- Horn
- Hour meter
- Hydraulic check-points
- Interlock
- Lifting points
- Neutral start arrangement
- Operator's platform vibration dampened
- Operator's seat adjustable forward&reverse
- Operator's station, fixed
- Parking brake
- Rear axle Limited slip
- Rear axle No-spin
- Safety belt(CAB/ROPS)
- Scrapers, fixed steel, for padfoot drum
- Seat belt 2", (not Open Platform)
- Service indicators/warnings
- Storage box on operator's platform
- Tie-down points
- Tool boxes, integrated in fenders
- User's instructions one set
- Vandal cover (over instrument panel)
- Vibration quick-stop

OPTIONAL EQUIPMENT

- 50 hours Service kit
- Bolt-on padfoot shell kit
- Compaction Meter (CMV) with tilt & gradeability indicator
- Extra set of user's instruction
- First aid box
- Driving lights, left hand
- Driving lights, right hand
- Lights, working, LED
- Operator's seat adjustable comfort
- Operator's station rotating
- Radio with MP3 (Cab)
- Rear view mirrors traffic view
- Remote monitoring Dyn@Link
- Rotating beacon
- Speedometer including pass counter
- Tool set
- Swivel operator station

Find us locally at www.dynapac.com

We reserve the right to change specifications without notice. Photos and illustrations do not always show standard versions of machines.
The above information is a general description only, all information's are supplied without liability.