F2500WS

Highway Paver



Find us locally at www.dynapac.com

We reserve the right to change specifications without notice. Photos and illustrations do not always show standard versions of machines.The above information is a general description only, all informations are supplied without liability.



Technical Data

Material hopper

Capacity	6.0 m³
Dumping height (center/outside)	574 mm /587 mm
Hopper width, internal	3.14 m

Conveyor

Conveyor type	Dual bar feeder
Conveyor width	2 x 580 mm
Conveyor control	2 independent conveyors with limit switches and speed control

Engine

Manufacturer/Model	Cummins QSB 6.7-C173
Emissions according to	Stage IIIA (Tier 3)
Rated power	129 kW @ 2200 rpm
Electrical system	24 V
Fuel tank capacity	315 l

Auger

Auger diameter	380 mm
Auger control	Automatic with ultrasonic sensors

Dimensions

Basic width	2.55 m
Working width, max.	6.70 m
Working width, minimum (with reducing shoe)	2.05 m
Front ramp angle	17°

Masses

Basic weight (incl. standard screed)	17.5 t

Capacity

Placement thickness (max)	300 mm
Theoretical placement capacity	650 t/h

Find us locally at www.dynapac.com

We reserve the right to change specifications without notice. Photos and illustrations do not always show standard versions of machines.The above information is a general description only, all informations are supplied without liability.

F2500WS

Highway Paver

Dimensions

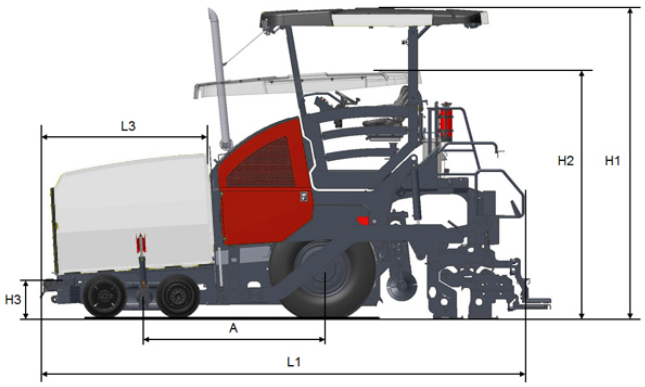

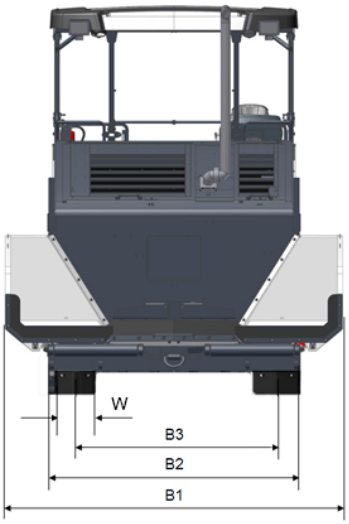

A. Axle track	
A. Wheelbase	2,241 mm
B1. Width, max.	3,250 mm
B2. Width, standard	2,550 mm
B3. Width, wheel track	2,053 mm
H1. Height, max.	3,900 mm
H2. Height, transport	3,100 mm
H3. Height	493 mm
L1. Length	6,100 mm
L3. Length, hopper	2,123 mm

Find us locally at www.dynapac.com

We reserve the right to change specifications without notice. Photos and illustrations do not always show standard versions of machines.The above information is a general description only, all informations are supplied without liability.

Screeds

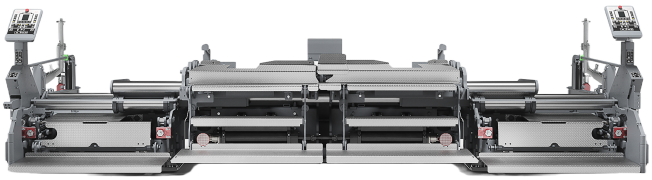

V5100 TV / TV E

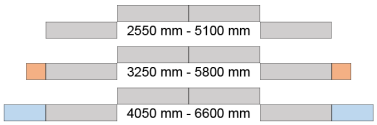

V6000 TV / TV E

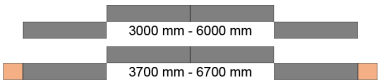

Legend

- 1275 mm V5100 section
- 1500 mm V6000 section
- 750 mm extension box
- 350 mm extension box

Find us locally at www.dynapac.com

We reserve the right to change specifications without notice. Photos and illustrations do not always show standard versions of machines.The above information is a general description only, all informations are supplied without liability.