F2530CS

Highway Paver



Find us locally at www.dynapac.com

We reserve the right to change specifications without notice. Photos and illustrations do not always show standard versions of machines.The above information is a general description only, all informations are supplied without liability.



Technical Data

Material hopper

Capacity	17 t
Dumping height (center/outside)	525 mm/530 mm
Hopper width, internal	3.29 m

Conveyor

Conveyor type	Dual bar feeder
Conveyor width	2 x 655
Conveyor control	Automatic with limit switches

Engine

Manufacturer/Model	Cummins/QSB6.7-C190
Emissions according to	Stage IIIA (Tire 3)
Rated power, SAE J1995	142 kW (193 Hp) @ 2200 rpm
Electrical system	24 V
Fuel tank capacity	337 l

Engine

Emissions according to	India BS IV
Rated power, SAE J1995	129 kw @ 2200 rpm
Electrical system	24 V
Fuel tank capacity	362 l

Engine

Manufacturer/Model	Cummins B6.7CSIV201F
Emissions according to	China IV
Rated power, SAE J1996	149 kW @ 2200 rpm
Manufacturer/Model	DCEC B6.7CS4 193C
Rated power, SAE J1996	142 kW @ 2200 rpm
DEF tank capacity	37 l
Electrical system	24 V
Fuel tank capacity	362 l

Auger

Auger diameter	380 mm
Auger control	Automatic with ultrasonic sensors

Dimensions

Basic width	2.55 m
Working width, max.	10 m
Front ramp angle	13°

Masses

Weight	21.5 t

Capacity

Placement thickness (max)	500 mm
Theoretical placement capacity	800 t/h

Find us locally at www.dynapac.com

We reserve the right to change specifications without notice. Photos and illustrations do not always show standard versions of machines.The above information is a general description only, all informations are supplied without liability.

F2530CS

Highway Paver

Dimensions

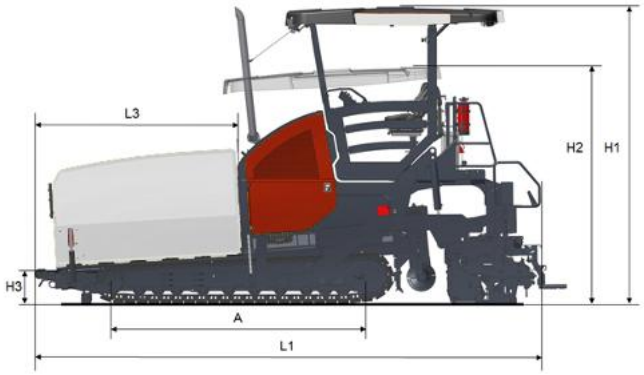

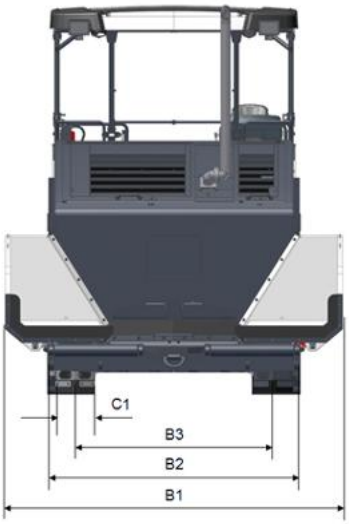

A. Axle track	3360 mm
B1. Width, max.	3470 mm
B2. Width, standard	2550 mm
B3. Width, center of tracks	1992 mm
C1. Track width	320 mm
H1. Height, max.	3900 mm
H2. Height, transport	3100 mm
H3. Height	525 mm
L1. Length	6630 mm
L3. Length, hopper	2600 mm

Find us locally at www.dynapac.com

We reserve the right to change specifications without notice. Photos and illustrations do not always show standard versions of machines.The above information is a general description only, all informations are supplied without liability.

Screeds



V5100 TV / TV E



V6000 TV / TV E

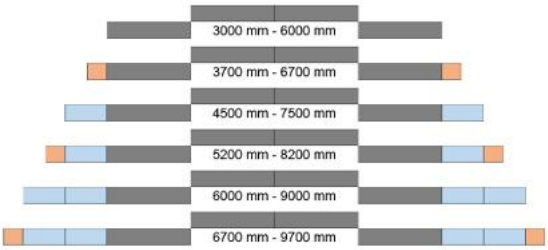

R300 TV G / TV E

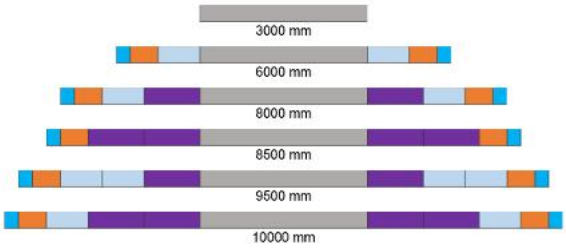

Legend

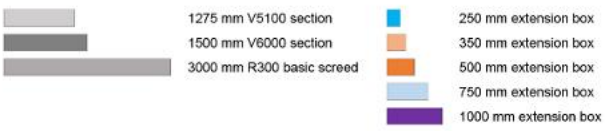

Find us locally at www.dynapac.com

We reserve the right to change specifications without notice. Photos and illustrations do not always show standard versions of machines.The above information is a general description only, all informations are supplied without liability.