F2550CS
HIGHWAY PAVERS



TECHNICAL DATA

MASSES

Weight	22.5 t

DIMENSIONS

Basic width	2.55 m
Working width, max.	12.5 m
Ramp angle	13°

CAPACITY

Placement thickness (max)	500 mm
Theoretical placement capacity	900 t/h

MATERIAL HOPPER

Capacity	17 t
Dumping height (center/outside)	525 mm/530 mm
Hopper width, internal	3.29 m

TRACTION

Maximum paving speed	28 m/min
Transport speed	4 km/h

ENGINE

Manufacturer/Model	Cummins/QSB6.7-C220
Emissions according to	Stage IIIA (Tire 3)
Rated power, SAE J1995	164 kW (223 Hp) @ 2200 rpm
Electrical system	24 V
Fuel tank capacity	337 l

UNDERCARRIAGE

Crawler length	3.36 m
Crawler width	320 mm
Drive Technology	Hydrostatic

CONVEYOR

Conveyor type	Dual bar feeder
Conveyor width	2 x 655 mm
Conveyor control	Automatic with limit switches

AUGER

Auger diameter	430 mm
Auger control	Automatic with ultrasonic sensors

Find us locally at www.dynapac.com

We reserve the right to change specifications without notice. Photos and illustrations do not always show standard versions of machines. The above information is a general description only, all informations are supplied without liability.

F2550CS
HIGHWAY PAVERS



DIMENSIONS

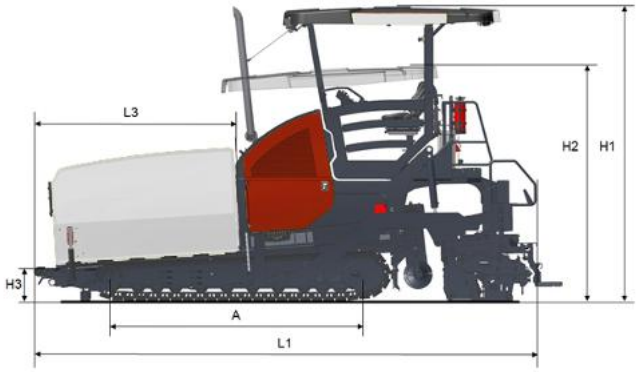



DIMENSIONS

A. Axle track	3360 mm
B1. Width, max.	3470 mm
B2. Width, standard	2550 mm
B3. Width, center of tracks	1992 mm
C1. Track width	320 mm
H1. Height, max.	3900 mm
H2. Height, transport	3100 mm
H3. Height	525 mm
L1. Length	6630 mm
L3. Length, hopper	2600 mm

We reserve the right to change specifications without notice. Photos and illustrations do not always show standard versions of machines. The above information is a general description only, all informations are supplied without liability.

F2550CS
HIGHWAY PAVERS



COMPATIBLE SCREEDS

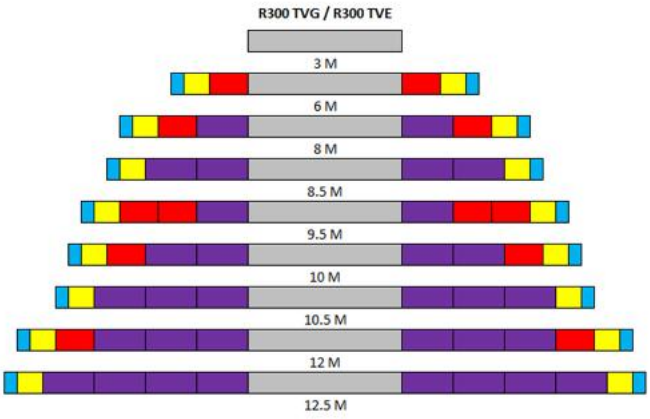



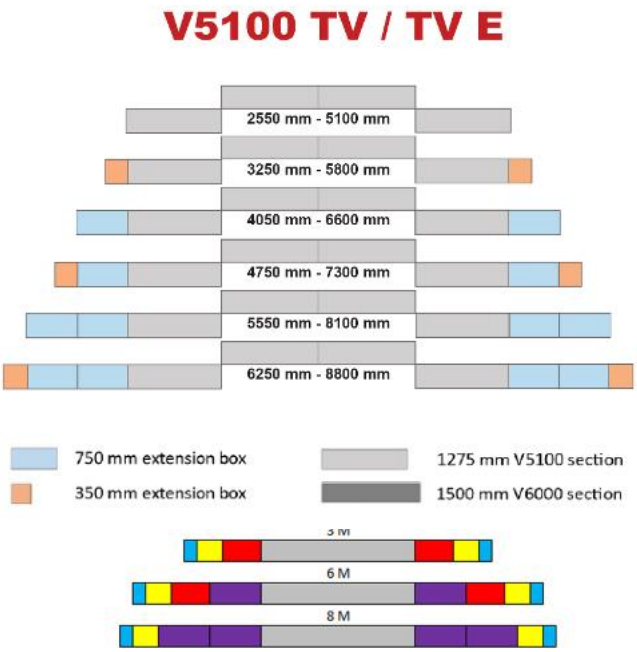

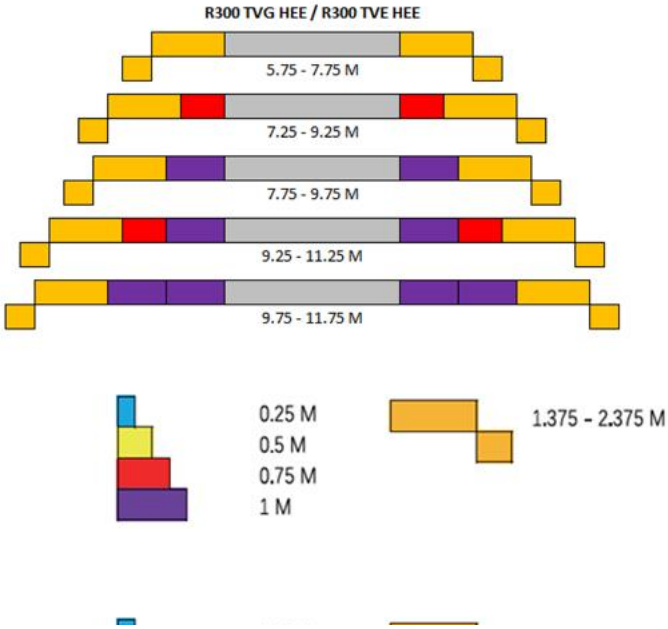

Find us locally at www.dynapac.com

We reserve the right to change specifications without notice. Photos and illustrations do not always show standard versions of machines. The above information is a general description only, all informations are supplied without liability.