SD2550CS

Highway Pavers



Find us locally at www.dynapac.com

We reserve the right to change specifications without notice. Photos and illustrations do not always show standard versions of machines.The above information is a general description only, all informations are supplied without liability.



Technical Data

Material Hopper

Hopper width, internal	3.29 m
Capacity	7.0 m^3
Dumping height (center/outside)	525 mm /530 mm

Conveyor

Conveyor type	Dual bar feeder
Conveyor control	Automatic with limit switches
Conveyor width	2x 655 mm

Engine

Manufacturer /Model	Cummins QSB6.7-C260
Emissions according to	EU Stage IIIA
Rated power, SAE J1995	194 kW @ 2200 rpm
Electrical system	24 V
Fuel tank capacity	337 l

Engine

Manufacturer /Model	Cummins QSB6.7-C260
Emissions according to	EU Stage V /US EPA t4f
Rated power, SAE J1995	194 kW @ 2200 rpm
Electrical system	24 V
DEF tank capacity	37 l
Fuel tank capacity	362 l

Engine

Manufacturer /Model	Cummins B6.7CSIV264F
Emissions according to	China IV
Rated power, SAE J1996	194 kW @ 2200 rpm
DEF tank capacity	37 l
Electrical system	24 V
Fuel tank capacity	362 l

Auger

Auger diameter	500 mm
Auger control	Automatic with ultrasonic sensors

Dimensions

Basic width	2.55 m
Working width, max.	14 m
Working width, minimum (with reducing shoe)	2.05 m
Front ramp angle	13°

Masses

Weight	21.0 t

Capacity

Placement thickness (max)	360 mm
Theoretical placement capacity	1100 t/h

Find us locally at www.dynapac.com

We reserve the right to change specifications without notice. Photos and illustrations do not always show standard versions of machines.The above information is a general description only, all informations are supplied without liability.

SD2550CS

Highway Pavers

Dimensions

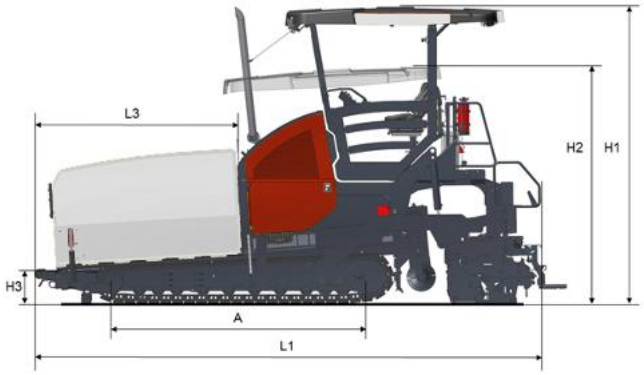

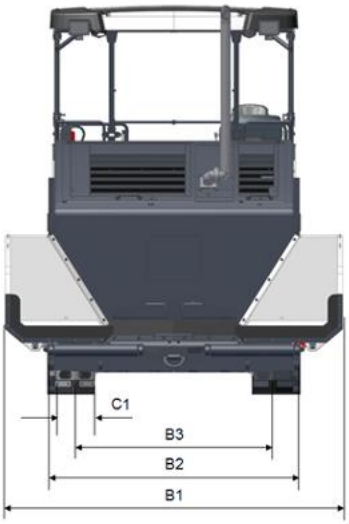

A. Axle track	3.36 m
B1. Width, max.	3.47 m
B2. Width, standard	2.55 m
B3. Width, center of tracks	1.99 m
C1. Track width	0.32 m
H1. Height, max.	3.90 m
H2. Height, transport	3.10 m
H3. Height	0.46 m
L1. Length	6.63 m
L3. Length, hopper	2.60 m

Find us locally at www.dynapac.com

We reserve the right to change specifications without notice. Photos and illustrations do not always show standard versions of machines.The above information is a general description only, all informations are supplied without liability.

Screeds



V5100 TV / TV E / TH E



V6000 TV / TV E / TH E

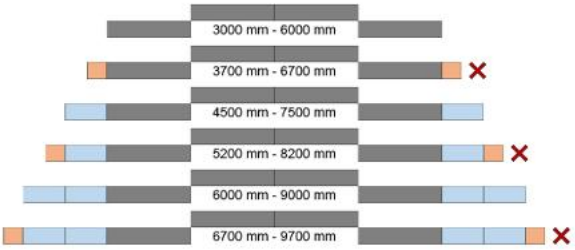

R300 TV / TV E

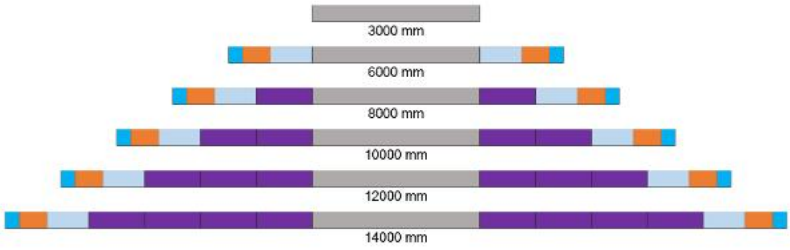

R300 TV HEE / TV E HEE

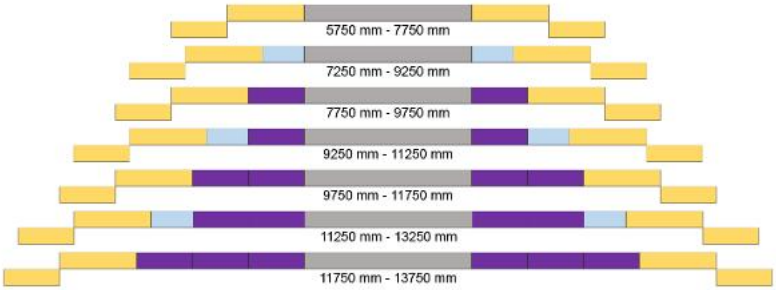

Legend

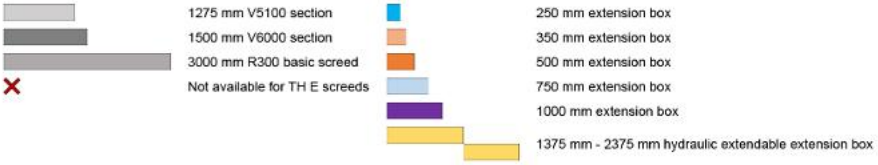

Find us locally at www.dynapac.com

We reserve the right to change specifications without notice. Photos and illustrations do not always show standard versions of machines.The above information is a general description only, all informations are supplied without liability.