SD25 80C e

Highway Paver



Find us locally at www.dynapac.com

We reserve the right to change specifications without notice. Photos and illustrations do not always show standard versions of machines.The above information is a general description only, all informations are supplied without liability.



Technical Data

Push Roller System

Standard	Fixed, pivotable
Option	hydraulic Damping and stepless adjustable (20 cm) with automatic function

Material Hopper

Dumping height	540 mm
Hopper volume	6 m3/12 t
Hopper width	3290 mm

Conveyor

Conveyor control	Proportional with paddle sensor
Conveyor type	Conveyor, reversible
Conveyor width	2x 655 mm

Electrical system

Auxiliary battery voltage	24 V
Battery capacity (gross)	294 kWh
Battery type	Lithium-Ion (NMC)
Motor type	Permanent Magnet Synchronous Motor (PMSM)
Nominal battery voltage	665 V
System Power (Peak)	235 kW

Drive

Undercarriage type	Crawler
Drive Type	Independent hydrostatic driven crawler systems
Crawler length	2900 mm
Crawler width	0.32 m
Maximum paving speed	28 m/min
Maximum transport speed	4 km/h

Auger

Auger type	Center drive, reversible
Auger diameter	380 mm
Auger control	Independent proportional with sonic sensors
Adjustable height	250 mm
Auger wing type	Separately replaceable

Working Width

Basic working width (retracted)	2.55 m (V5100) 3.00 m (V6000)
Basic working width (extended)	5.10 m (V5100) 6.00 m (V6000)

Dimensions

Basic width	2.55 m
Front ramp angle	15°
Transport length	6.15 m
Working width, max.	6 m

Masses

Weight	21.0 t

Capacity

Maximum paving thickness	-150 mm /310 mm
Theoretical placement capacity	800 t/h

Charging

5 – 80 % @ 235 kW (DC)	~ 40 min
5 – 80 % @ 400 V, 43 kW (AC, Type II)	~ 4.5 h

Find us locally at www.dynapac.com

We reserve the right to change specifications without notice. Photos and illustrations do not always show standard versions of machines.The above information is a general description only, all informations are supplied without liability.

SD25 80C e

Highway Paver

Dimensions

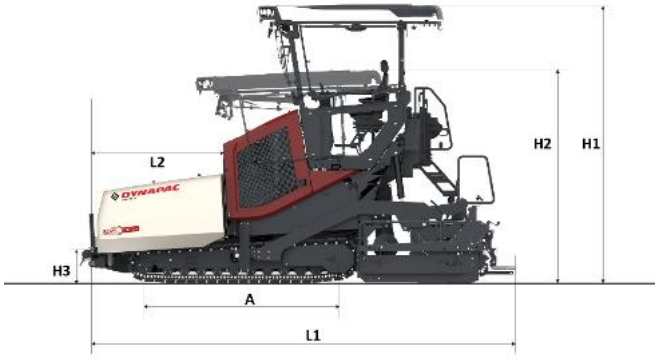

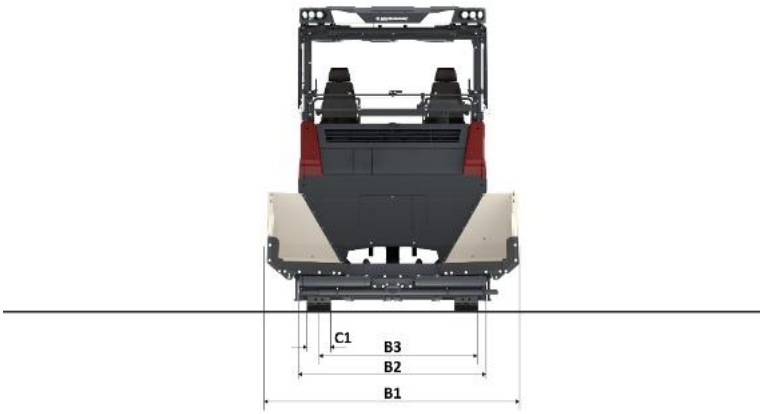

A. Axle track	2.90 m
B1. Width, max.	3.40 m
B2. Width, standard	2.55 m
B3. Width, center of tracks	1.99 m
C1. Crawler Width	0.32 m
H1. Height, max.	3.90 m
H2. Height, transport	3.10 m
H3. Push Roller Height	0.49 m
L1. Length	6.15 m
L2. Length, hopper	2.12 m

Find us locally at www.dynapac.com

We reserve the right to change specifications without notice. Photos and illustrations do not always show standard versions of machines.The above information is a general description only, all informations are supplied without liability.

Screeds

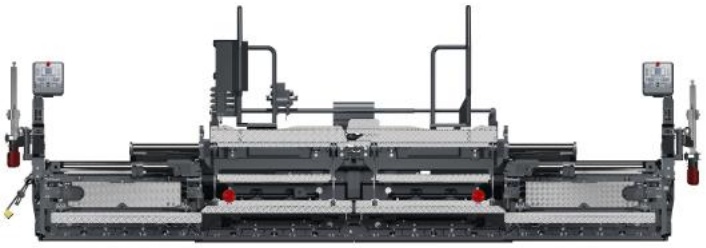

V5100 TV E

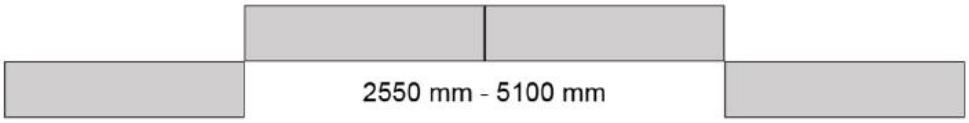

V6000 TV E

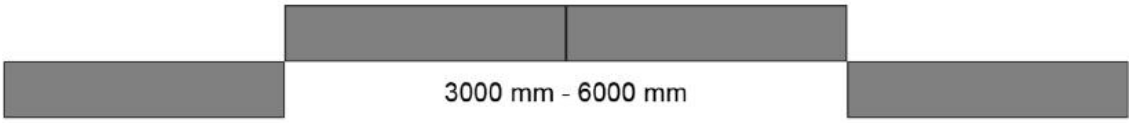



Find us locally at www.dynapac.com

We reserve the right to change specifications without notice. Photos and illustrations do not always show standard versions of machines.The above information is a general description only, all informations are supplied without liability.