SD25 90C

Highway Paver



Find us locally at www.dynapac.com

We reserve the right to change specifications without notice. Photos and illustrations do not always show standard versions of machines.The above information is a general description only, all informations are supplied without liability.

DYNAPAC
FAYAT GROUP



Technical Data

Push Roller System

Standard	Fixed, pivotable
Option	hydraulic Damping and stepless adjustable (20 cm) with automatic function

Material Hopper

Dumping height	540 mm
Hopper length	2.60 mm
Hopper volume	7 m3 /15 t
Hopper width, internal	3290 mm

Conveyor

Conveyor control	Proportional with paddle sensor
Conveyor type	Conveyor, reversible
Conveyor width	2x 655 mm

Engine

Manufacturer /Model	Cummins B6.7-C225
Emissions according to	EU Stage V
Rated power, SAE J1995	168 kW @ 2200 rpm
Peak power	186 kW
DEF tank capacity	37 l
Fuel tank capacity	362 l
Average fuel conumption	9.45 l/h*

Engine

Manufacturer /Model	Cummins QSB6.7-C220
Emissions according to	EU Stage IIIA
Rated power, SAE J1995	164 kW @ 2200 rpm
Peak power	186 kW
Fuel tank capacity	362 l
Average fuel conumption	9.45 l/h*

Drive

Undercarriage type	Crawler
Drive Type	Independent hydrostatic driven crawler systems
Crawler length	3360 mm
Crawler width	0.32 m
Maximum paving speed	28 m/min
Maximum transport speed	4 km/h

Auger

Auger type	Center drive, reversible
Auger diameter	430 mm
Auger control	Independent proportional with sonic sensors
Adjustable height	250 mm
Auger wing type	Separately replaceable

Generator (for electric screeds)

Nominal power	35 kVA
Peak power	45 kVA
Type	Synchronous

Working Width

Minimum working width	2.05 m
Maximum working width	8.80 m (V5100) 9.70 m (V6000) 12.00 m (R300)
Basic working width (retracted)	2.55 m (V5100) 3.00 m (V6000)
Basic working width (extended)	5.10 m (V5100) 6.00 m (V6000)

Dimensions

Basic width	2.55 m
Front ramp angle	15°
Transport length	6.15 m
Working width, max.	12 m

Masses

Weight	22.0 t

Capacity

Placement thickness (max)	360 mm
Theoretical placement capacity	900 t/h

Find us locally at www.dynapac.com

We reserve the right to change specifications without notice. Photos and illustrations do not always show standard versions of machines.The above information is a general description only, all informations are supplied without liability.

SD25 90C

Highway Paver

Dimensions

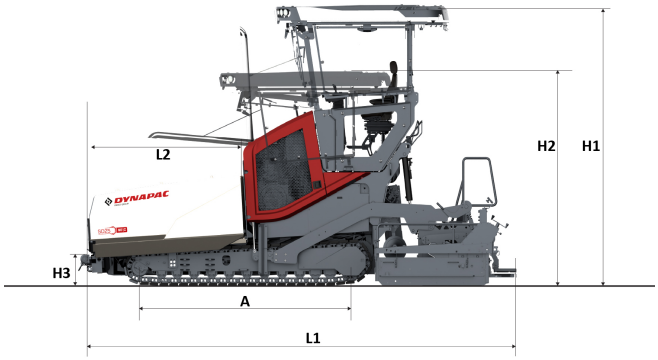

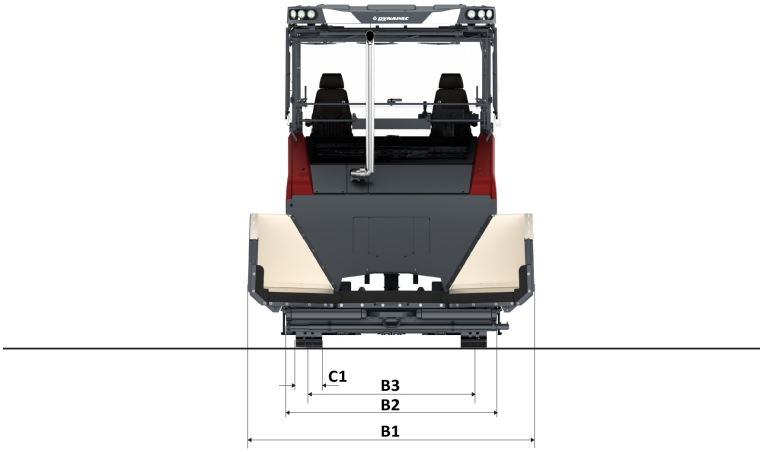

A. Axle track	3.36 m
B1. Width, max.	3.47 m
B2. Width, standard	2.55 m
B3. Width, center of tracks	1.99 m
C1. Crawler Width	0.32 m
H1. Height, max.	3.94 m
H2. Height, transport	3.10 m
H3. Push Roller Height	0.46 m
L1. Length	6.63 m
L2. Length, hopper	2.60 m

Find us locally at www.dynapac.com

We reserve the right to change specifications without notice. Photos and illustrations do not always show standard versions of machines.The above information is a general description only, all informations are supplied without liability.

Screeds

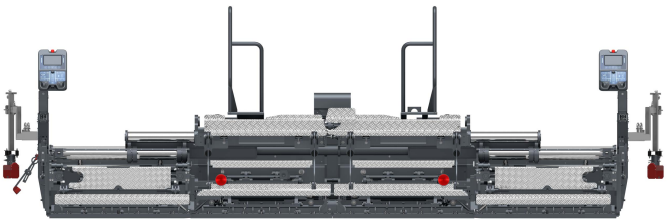

V5100 TV E / TH E

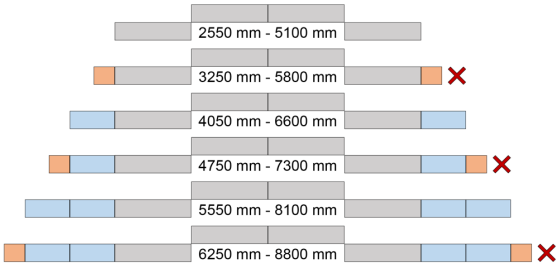

V6000 TV E / TH E

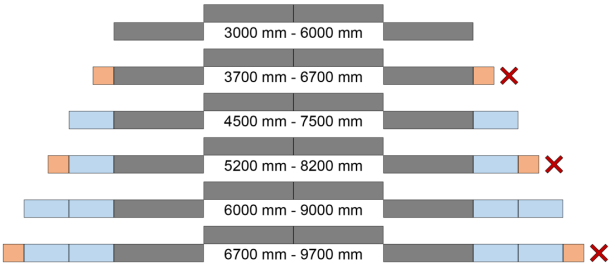

R300 TV E

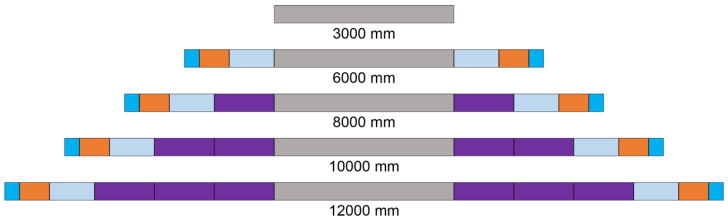

R300 TV E HEE

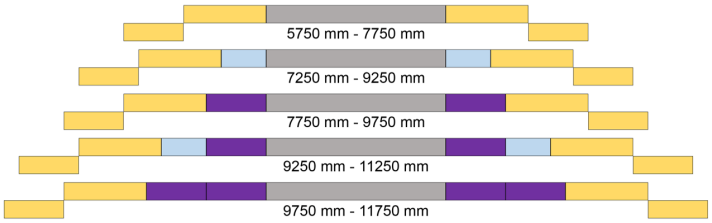

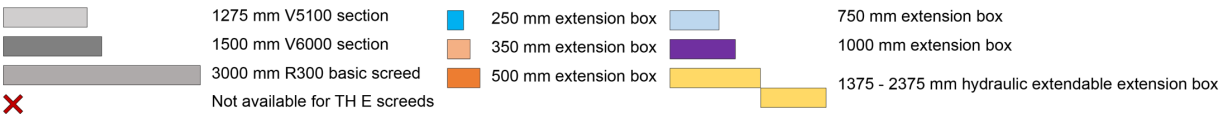

Find us locally at www.dynapac.com

We reserve the right to change specifications without notice. Photos and illustrations do not always show standard versions of machines.The above information is a general description only, all informations are supplied without liability.